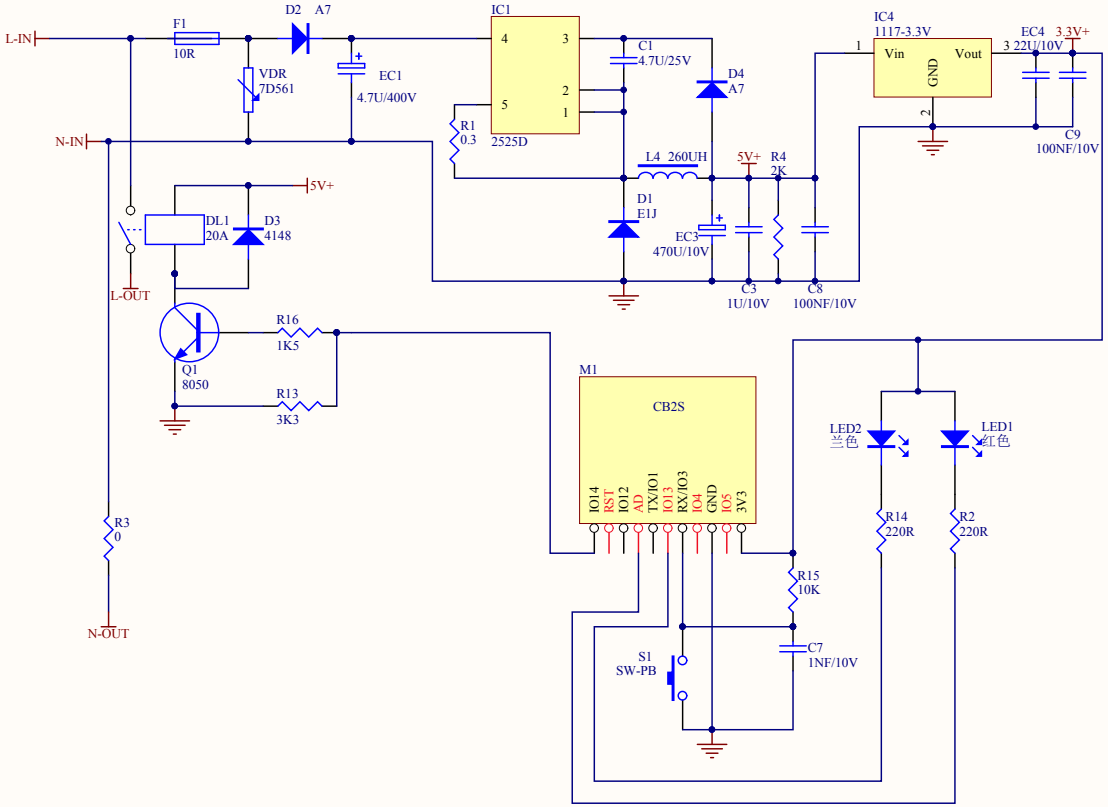

Title		
Size B	Number	Revision
Date: 2022/8/8 星期一	Sheet of	
File: I:\BSD新\..BSD不计电量电路图V4（过用BSD01,29,30,51,58,59,60,61,63).SCH	Drawn By:	